AREG IRLP Interface V0.3

(C) AREG 2005 Design by Peter Cockburn

150mm
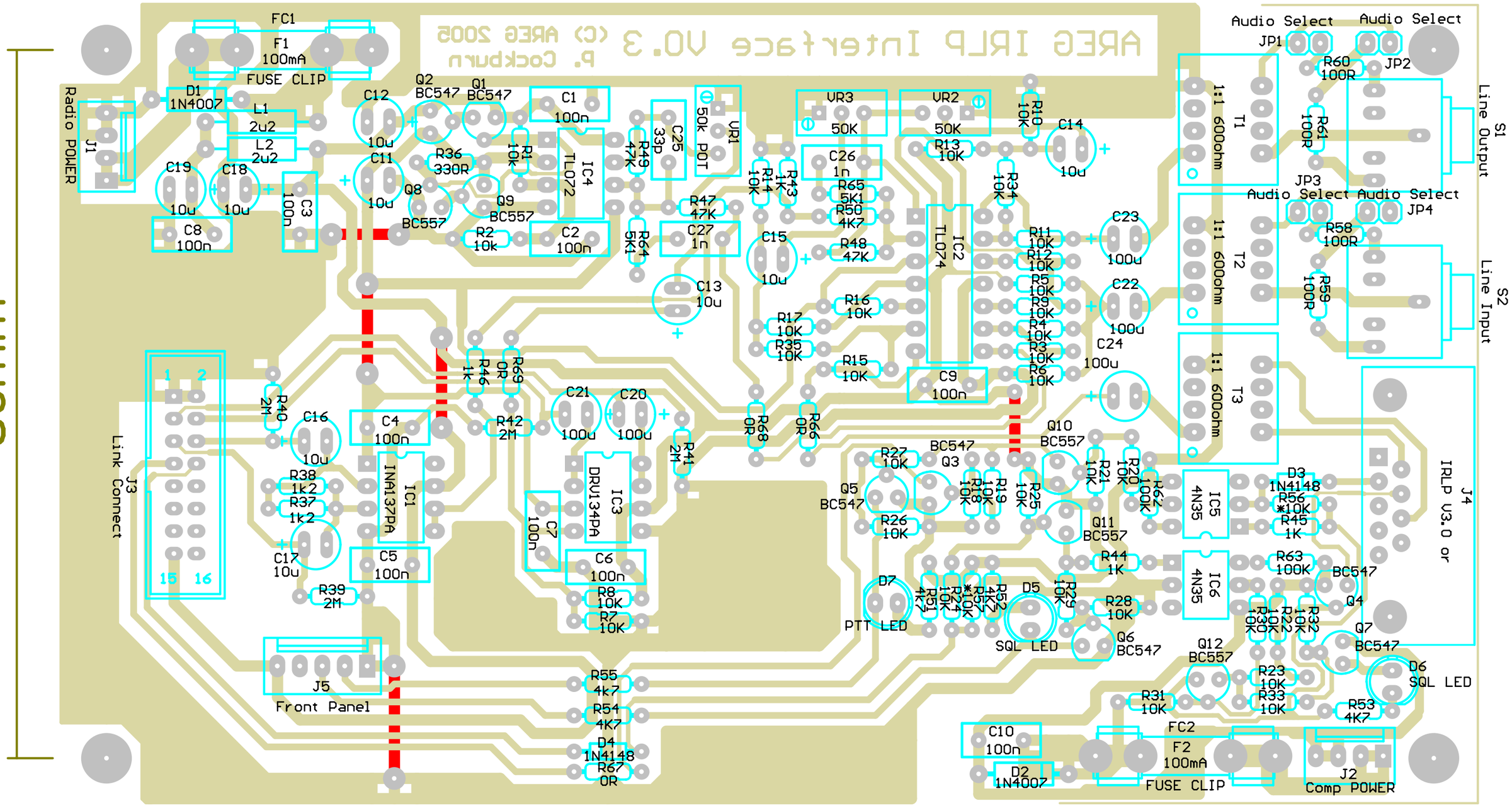
80mm