600ohm Balanced DX Interface

Copyright (c) Peter Cockburn VK5TZX 2006
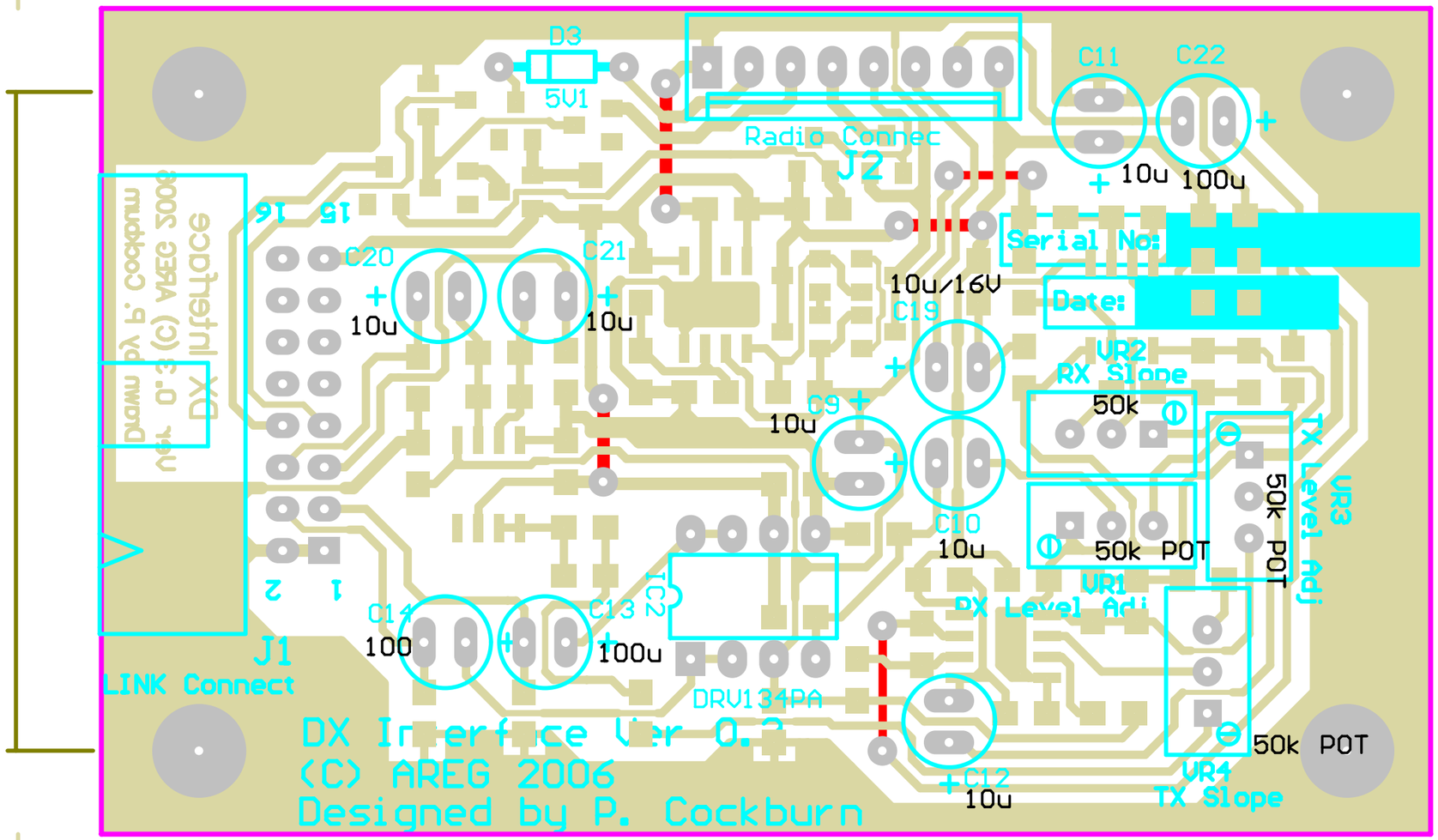
Free for use in Amateur Radio Applications.
Shall not be used for Commercial or Medical Applications without the consent of the Author.